Docusign Envelope ID: 543F3D2E-B076-8893-827C-474D0AA48EEF

Esse Architects
632 Pershing Road | Raleigh NC 27608

Addendum No. 2

Wake County Mini City EMS

Esse Architects Project #2506 | Owner ID: RFB #26-075

Addendum No. 2

September 10, 2026

TO: ALL PRIME BIDDERS OF RECORD

This Addendum forms a part of the Contract Documents and modifies the original Project Manual and Construction Documents dated August 17, 2026, Acknowledge receipt of this Addendum in the space provided on the Bid Form. Failure to do so may subject the Bidder to disqualification. This Addendum form consists of **one (1) page and six (6) 24"X36" attachments as described in this form. All documents are distributed digitally.**

DRAWINGS

Item No.	Description

1. Make the following revisions:
    a. Replace Sheet C3.00 UTILITY PLAN with the attached revised sheet.

2. Make the following revisions:
    a. Replace Sheets E100 ELECTRICAL SITE PLAN NEW WORK, E201 ELECTRICAL POWER NEW WORK, E202 ELECTRICAL ROOF PLAN, SC200 SECURITY NEW WORK, and T200 TELECOM NEW WORK with the attached revised sheets.

CLARIFICATIONS

Item No.	Description

1. The Duke Progress switching cabinet referenced on sheets C3.00 and E100 is approximately 96" x 52". The General Contractor must coordinate the location of the switching cabinet with Duke Progress and all other site utilities.

ATTACHMENTS

1. C3.00 UTILITY PLAN
2. E100 ELECTRICAL SITE PLAN NEW WORK
3. E201 ELECTRICAL POWER NEW WORK
4. E202 ELECTRICAL ROOF PLAN
5. SC200 SECURITY NEW WORK
6. T200 TELECOM NEW WORK

ERIC M. SOWERS
REGISTERED ARCHITECT
DocuSigned by:
9314
Eric M. Sowers
A72EFB734E97478...
RALEIGH, N.C.

9/10/2026

END OF ADDENDUM NUMBER TWO

Docusign Envelope ID: 543F3D2E-B076-8893-827C-474D0AA48EEF

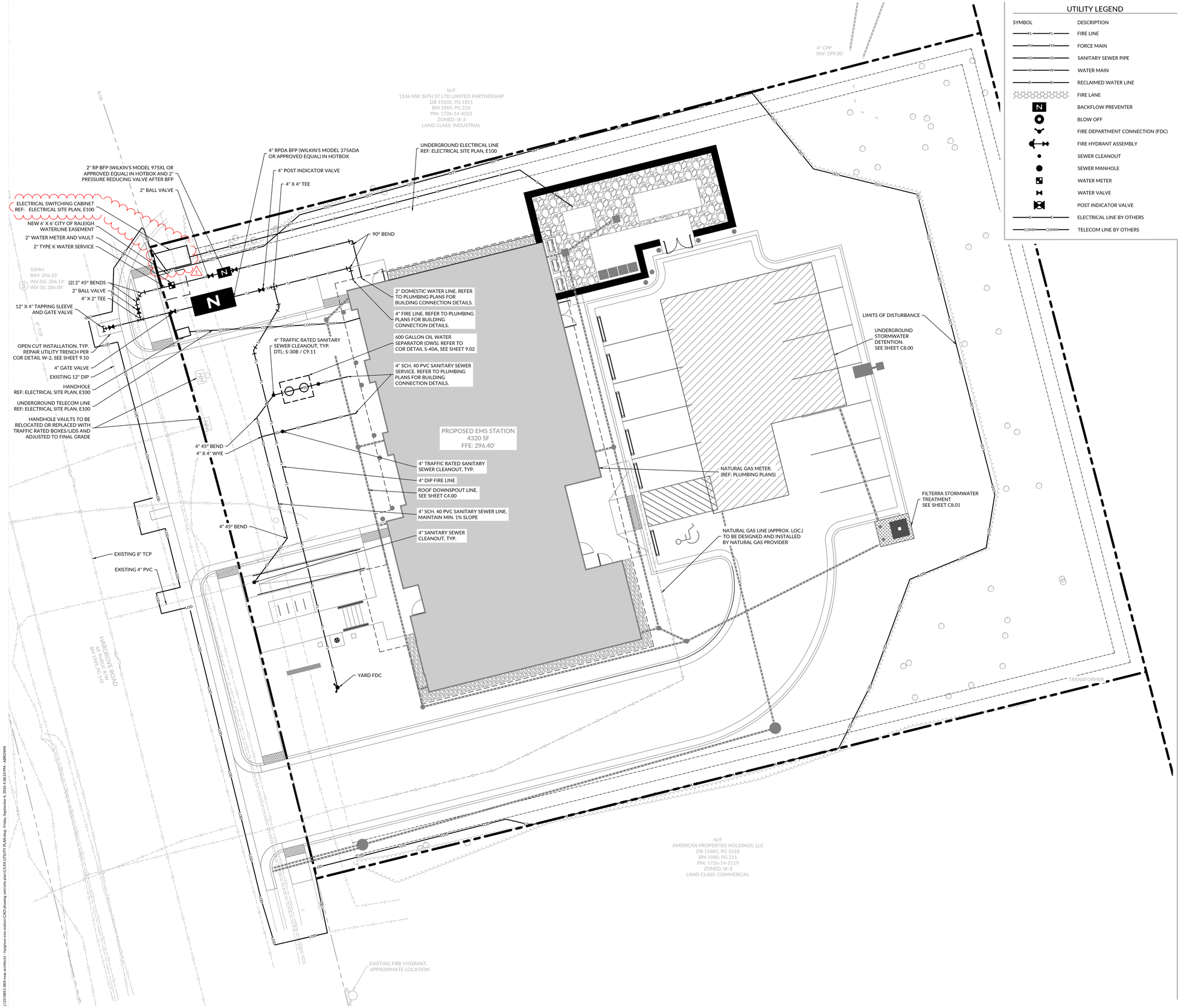

UTILITY LEGEND

SYMBOL	DESCRIPTION
FL FL	FIRE LINE
FM FM	FORCE MAIN
SS SS	SANITARY SEWER PIPE
W W	WATER MAIN
R R	RECLAIMED WATER LINE
	FIRE LANE
N	BACKFLOW PREVENTER
	BLOW OFF
	FIRE DEPARTMENT CONNECTION (FDC)
	FIRE HYDRANT ASSEMBLY
	SEWER CLEANOUT
	SEWER MANHOLE
	WATER METER
	WATER VALVE
	POST INDICATOR VALVE
E E	ELECTRICAL LINE BY OTHERS
COMM COMM	TELECOM LINE BY OTHERS

STANDARD UTILITY NOTES:

1. ALL MATERIALS & CONSTRUCTION METHODS SHALL BE IN ACCORDANCE WITH CITY OF RALEIGH DESIGN STANDARDS, DETAILS & SPECIFICATIONS (REFERENCE: CORPUD HANDBOOK, CURRENT EDITION)
2. UTILITY SEPARATION REQUIREMENTS:
   - 2.A. A DISTANCE OF 100' SHALL BE MAINTAINED BETWEEN SANITARY SEWER & ANY PRIVATE OR PUBLIC WATER SUPPLY SOURCE SUCH AS AN IMPOUNDED RESERVOIR USED AS A SOURCE OF DRINKING WATER. IF ADEQUATE LATERAL SEPARATION CANNOT BE ACHIEVED, FERROUS SANITARY SEWER PIPE SHALL BE SPECIFIED & INSTALLED TO WATERLINE SPECIFICATIONS. HOWEVER, THE MINIMUM SEPARATION SHALL NOT BE LESS THAN 25' FROM A PRIVATE WELL OR 50' FROM A PUBLIC WELL.
   - 2.B. WHEN INSTALLING WATER &/OR SEWER MAINS, THE HORIZONTAL SEPARATION BETWEEN UTILITIES SHALL BE 10'. IF THIS SEPARATION CANNOT BE MAINTAINED DUE TO EXISTING CONDITIONS, THE VARIATION ALLOWED IS THE WATER MAIN IN A SEPARATE TRENCH WITH THE ELEVATION OF THE WATER MAIN AT LEAST 18" ABOVE THE TOP OF THE SEWER & MUST BE APPROVED BY THE PUBLIC UTILITIES DIRECTOR. ALL DISTANCES ARE MEASURED FROM OUTSIDE DIAMETER TO OUTSIDE DIAMETER.
   - 2.C. WHERE IT IS IMPOSSIBLE TO OBTAIN PROPER SEPARATION, OR ANYTIME A SANITARY SEWER MAIN PASSES OVER A WATERMAIN, DIP MATERIALS OR STEEL ENCASEMENT EXTENDED 10' ON EACH SIDE OF CROSSING MUST BE SPECIFIED & INSTALLED TO WATERLINE SPECIFICATION.
   - 2.D. 5.0' MINIMUM HORIZONTAL SEPARATION IS REQUIRED BETWEEN ALL SANITARY SEWER & STORM SEWER FACILITIES, UNLESS DIP MATERIAL IS SPECIFIED FOR SANITARY SEWER.
   - 2.E. MAINTAIN 18" MIN. VERTICAL SEPARATION AT ALL WATERMAIN & RCP STORM DRAIN CROSSINGS; MAINTAIN 18" MIN. VERTICAL SEPARATION AT ALL SANITARY SEWER & RCP STORMDRAIN CROSSINGS. WHERE ADEQUATE SEPARATIONS CANNOT BE ACHIEVED, SPECIFY DIP MATERIALS & A CONCRETE CRADLE HAVING 6" MIN. CLEARANCE (PER CORPUD DETAILS W-41 & S-49).
   - 2.F. ALL OTHER UNDERGROUND UTILITIES SHALL CROSS WATER & SEWER FACILITIES WITH 18" MIN. VERTICAL SEPARATION REQUIRED.
3. ANY NECESSARY FIELD REVISIONS ARE SUBJECT TO REVIEW & APPROVAL OF AN AMENDED PLANS/OR PROFILE BY THE CITY OF RALEIGH PUBLIC UTILITIES DEPARTMENT PRIOR TO CONSTRUCTION.
4. DEVELOPER SHALL PROVIDE 30 DAYS ADVANCE WRITTEN NOTICE TO OWNER FOR ANY WORK REQUIRED WITHIN AN EXISTING CITY OF RALEIGH UTILITY EASEMENT TRAVERSING PRIVATE PROPERTY.
5. CONTRACTOR SHALL MAINTAIN CONTINUOUS WATER & SEWER SERVICE TO EXISTING RESIDENCES & BUSINESSES THROUGHOUT CONSTRUCTION OF PROJECT. ANY NECESSARY SERVICE INTERRUPTIONS SHALL BE PRECEDED BY A 24-HOUR ADVANCE NOTICE TO THE CITY OF RALEIGH PUBLIC UTILITIES DEPARTMENT.
6. SEWER BYPASS PUMPING – A BYPASS PLAN SEALED BY AN NC PROFESSIONAL ENGINEER STALL BE PROVIDED TO RALEIGH WATER PRIOR TO PUMPING OPERATIONS FOR APPROVAL. THE OPERATIONS AND EQUIPMENT SHALL COMPLY WITH THE PUBLIC UTILITIES HANDBOOK.
7. 3.0' MINIMUM COVER IS REQUIRED ON ALL WATER MAINS & SEWER FORCE MAINS. 4.0' MINIMUM COVER IS REQUIRED ON ALL REUSE MAINS.
8. IT IS THE DEVELOPER'S RESPONSIBILITY TO ABANDON OR REMOVE EXISTING WATER & SEWER SERVICES NOT BEING USED IN REDEVELOPMENT OF A SITE UNLESS OTHERWISE DIRECTED BY THE CITY OF RALEIGH PUBLIC UTILITIES DEPARTMENT. THIS INCLUDED ABANDONING TAP AT MAIN & REMOVAL OF SERVICE FROM ROW OR EASEMENT PER CORPUD HANDBOOK PROCEDURE.
9. INSTALL WATER SERVICES WITH METERS LOCATED AT ROW OR WITHIN A 2'X2' WATERLINE EASEMENT IMMEDIATELY ADJACENT. NOTE: IT IS THE APPLICANT'S RESPONSIBILITY TO PROPERLY SIZE THE WATER SERVICE FOR EACH CONNECTION TO PROVIDE ADEQUATE FLOW & PRESSURE.
10. INSPECTIONS OF 4" AND LARGER WATER MAINS OF THE PRIVATE DISTRIBUTION SYSTEM WILL BE INSPECTED AS PART OF THE INFRASTRUCTURE PERMIT.
11. PRIVATE SEWER MAINS AS PART OF A COLLECTION SYSTEM ARE PERMITTED AND INSPECTED UNDER THE PRIVATE INFRASTRUCTURE PERMIT FOR SEWER.
12. ANY WATER OR SEWER SERVICES ON PRIVATE PROPERTY THAT WILL BE INSTALLED UNDER CONSTRUCTION DRAWINGS MAY REQUIRE A PLUMBING UTILITY PERMIT IN THE CITY OF RALEIGH. CONSULT WITH THE ENGINEERING INSPECTION COORDINATOR DURING THE PRE-CONSTRUCTION MEETING ON THE NECESSARY PERMITS.
13. INSTALL SEWER SERVICES WITH CLEANOUTS LOCATED AT ROW OR EASEMENT LINE & SPACED PER THE CURRENT NC PLUMBING CODE.
14. PRESSURE REDUCING VALVED ARE REQUIRED ON ALL WATER SERVICES EXCEEDING 80 PSI: BACKWATER VALVES ARE REQUIRED ON ALL SANITARY SEWER SERVICES HAVING BUILDING DRAINS LOWER THAN 1.0' ABOVE THE NEXT UPSTREAM MANHOLE.
15. ALL ENVIRONMENTAL PERMITS APPLICABLE TO THE PROJECT MUST BE OBTAINED FROM NCDWQ, USACE &/OR FEMA FOR ANY RIPARIAN BUFFER, WETLAND &/OR FLOODPLAIN IMPACTS (RESPECTIVELY) PRIOR TO CONSTRUCTION.
16. NCDOT / RAILROAD ENCROACHMENT AGREEMENTS ARE REQUIRED FOR ANY UTILITY WORK (INCLUDING MAIN EXTENSIONS & SERVICE TAPS) WITHIN STATE OR RAILROAD ROW PRIOR TO CONSTRUCTION.
17. GREASE INTERCEPTOR / OIL WATER SEPARATOR SIZING CALCULATIONS & INSTALLATION SPECIFICATIONS SHALL BE APPROVED BY THE RW FOG PROGRAM COORDINATOR PRIOR TO ISSUANCE OF A UC AND/OR BUILDING PERMIT. CONTACT (919) 996-4516 OF FOG@RALEIGHNC.GOV FOR MORE INFORMATION.
18. CROSS-CONNECTION CONTROL PROTECTION DEVICES ARE REQUIRED BASED ON THE DEGREE OF HEALTH HAZARD INVOLVED AS LISTED IN APPENDIX B OF THE RULES GOVERNING PUBLIC WATER SYSTEMS IN NORTH CAROLINA.
19. THE DEVICES SHALL MEET THE AMERICAN SOCIETY OF SANITARY ENGINEERING (ASSE) STANDARDS AND BE ON THE UNIVERSITY OF SOUTHERN CALIFORNIA APPROVAL LIST.
20. THE DEVICE AND INSTALLATION SHALL MEET THE GUIDELINES OF APPENDIX A – GUIDELINES AND REQUIREMENTS OF THE CROSS CONNECTION PROGRAM IN RALEIGH'S SERVICE AREA.
21. THE DEVICES SHALL BE INSTALLED & TESTED (BOTH, INITIAL & PERIODIC TESTING THEREAFTER) IN ACCORDANCE WITH THE MANUFACTURER'S RECOMMENDATIONS OR THE LOCAL CROSS CONNECTION CONTROL PROGRAM, WHICHEVER IS MORE STRINGENT. CONTACT CROSS.CONNECTION@RALEIGHNC.GOV FOR MORE INFORMATION.
22. NOTICE FOR PROJECTS THAT INVOLVE AN OVERSIZED MAIN OR URBAN MAIN REPLACEMENT. ANY CITY REIMBURSEMENT GREATER THAN $250,000.00 MUST UNDERGO THE PUBLIC BIDDING PROCESS.
23. PRIVATE SUB-METERING – NO RESALE OF WATER SHALL OCCUR WITHOUT THE APPROVAL OF THE NORTH CAROLINA UTILITY COMMISSION. SUB-METERING SHALL BE IN ACCORDANCE WITH SECTION 1400 OF THE "SAFE DRINKING WATER ACT".

Esse Architects
632 PERSHING ROAD
RALEIGH, NORTH CAROLINA 27608
P 919.740.5669
www.essearchitects.com

WAKE COUNTY MINI CITY EMS STATION

4704 HARGROVE RD.
RALEIGH, NC
27616

WAKE COUNTY FACILITIES DESIGN & CONSTRUCTION

CONSULTANTS

CIVIL & LANDSCAPE ARCHITECTS
WITHERSRAVENEL
137 SOUTH WILMINGTON STREET, SUITE 200
RALEIGH, NC 27601
919.535.5200 T

STRUCTURAL
LYSAGHT & ASSOCIATES
120 ST. MARY'S STREET
RALEIGH, NC 27605
919.833.0495 T

MECHANICAL, ELECTRICAL, & PLUMBING
SALAS O'BRIEN
NORTH CAROLINA, INC.
701 OBERLIN ROAD, SUITE 300,
RALEIGH, NC 27605
919.832.8118 T

WAKE COUNTY
NORTH CAROLINA

SEALS

NORTH CAROLINA PROFESSIONAL ENGINEER SEAL 056188 SPENCER W. MEEKINS
Signature
Date: 9/4/2026

0 5 10
SCALE: 1 inch = 10 ft.

PROJECT INFORMATION

PROJECT NO.:	2506
PHASE:	BID SET
DATE:	09/4/2026
DRAWN BY:	KG
CHECKED BY:	SM

REVISIONS

NO.	DESCRIPTION	DATE
1	ADDENDUM 2	09/04/2026

SHEET INFORMATION

C3.00

UTILITY PLAN

J:\23\2053.1-004-esse architects - hargrove ems station\CAD\drawing sets\site plan\C3.XX UTILITY PLAN.dwg, Friday, September 4, 2026 4:48:24 PM, ABROWN

Docusign Envelope ID: 543F3D2E-B076-8893-827C-474D0AA48EEF

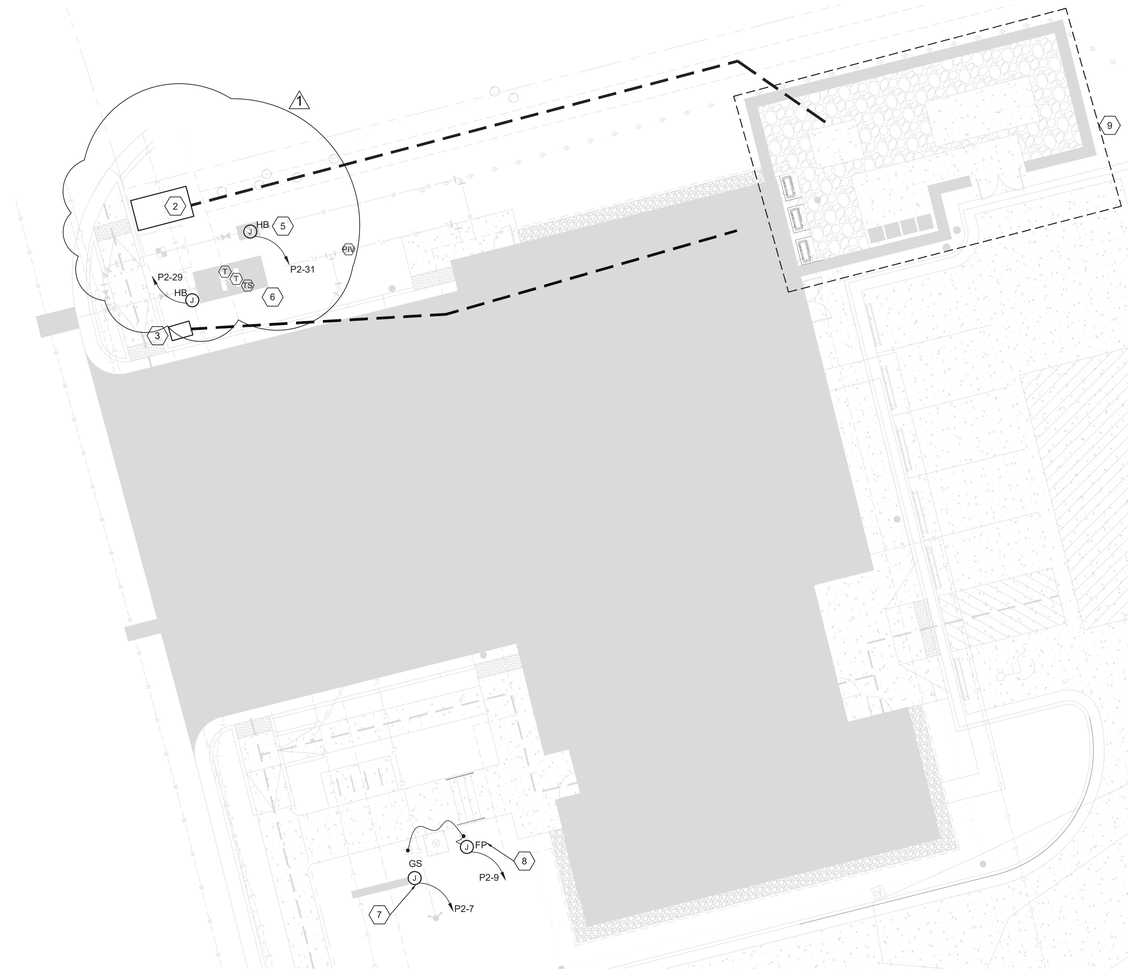

1 E100 ELECTRICAL SITE PLAN NEW WORK
1" = 10'-0"

NOTES KEYED TO 1/E100:

1. DUKE PROGRESS PAD MOUNTED TRANSFORMER. PROVIDE PAD PER 6/E101.
2. PROVIDE 2-4" PVC CONDUIT AS REQUIRED BY DUKE PROGRESS FROM PRIMARY COMPARTMENT OF TRANSFORMER TO NEW SWITCHING CABINET BY DUKE POWER. FINAL LOCATION TO BE DETERMINED IN FIELD BY DUKE REPRESENTATIVE. PROVIDE CONDUIT INSTALLATION PER DUKE STANDARDS.
3. PROVIDE T/C DUCTBANK PER DETAIL 1/E101. TERMINATE AT ROW IN 36"x24"x24" T15 RATED QUAZITE HANDHOLE PER DETAIL 5/E101.
4. PROVIDE GENERATOR AND PAD PER DETAIL 1/E103.
5. PROVIDE POWER CONNECTION AT DOMESTIC WATER HOTBOX.
6. PROVIDE POWER CONNECTION AT FIRE PROTECTION HOT BOX; MONITOR TAMPERS AND TEMP SENSOR IN HOT BOX AND POST INDICATOR VALVE ADJACENT TO HOT BOX.
7. PROVIDE POWER CONNECTION AT WAKE COUNTY GROUND SIGN.
8. PROVIDE TWO (2) TYPE "XC" IN-GROUND FIXTURES AT FLAG POLE AND CONNECT AS SHOWN.
9. REFERENCE 2/E100 FOR ENLARGED PLAN.

NOTES KEYED TO 2/E100:

1. DUKE PROGRESS PAD MOUNTED TRANSFORMER. PROVIDE PAD PER 6/E101.
2. PROVIDE GENERATOR AND PAD PER DETAIL 1/E103.
3. POWER CONNECTION FOR BLOCK HEATER, BATTERY CHARGER, ETC.
4. GENERATOR REMOTE EPO BUTTON. PROVIDE WIRING FROM BUTTON IN 1"C TO GENERATOR. PROVIDE 2" HIGH PHENOLIC LABEL TO READ-"GENERATOR EMERGENCY POWER OFF".

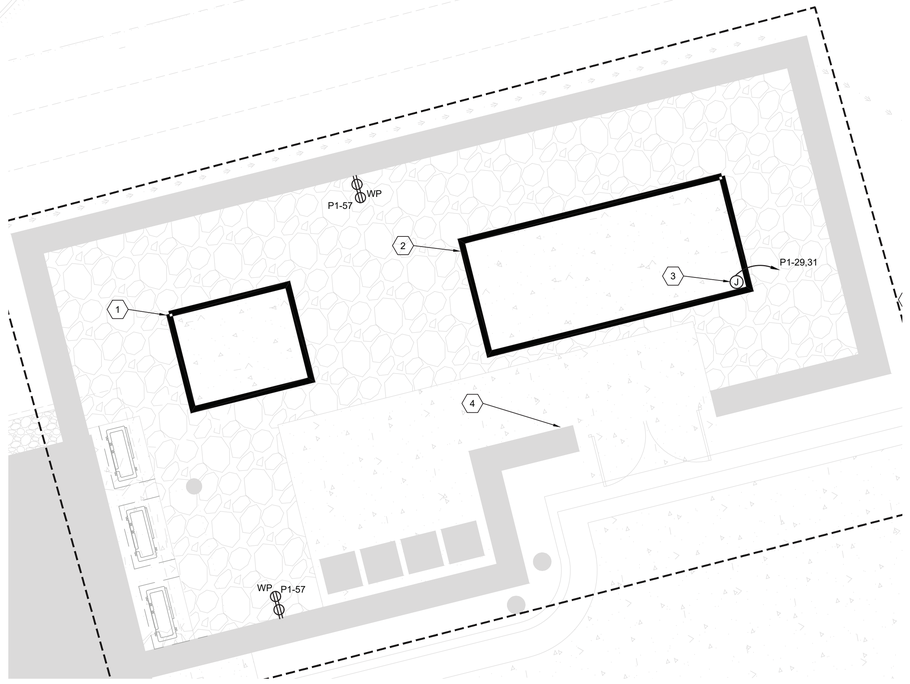

2 E100 ENLARGED SITE PLAN NEW WORK
1/4" = 1'-0"

Esse Architects
632 PERSHING ROAD
RALEIGH, NORTH CAROLINA 27608
P 919.742.5669
www.esse-architects.com

WAKE COUNTY MINI CITY EMS STATION

4704 HARGROVE RD.
RALEIGH, NC
27616

WAKE COUNTY FACILITIES DESIGN & CONSTRUCTION

CONSULTANTS

CIVIL & LANDSCAPE ARCHITECTS
WITHERSRAVENEL
137 SOUTH WILMINGTON STREET, SUITE 200
RALEIGH, NC 27601
919.535.5200 T

STRUCTURAL
LYSAGHT & ASSOCIATES
120 ST. MARY'S STREET
RALEIGH, NC 27605
919.833.0495 T

MECHANICAL, ELECTRICAL, PLUMBING, & FIRE PROTECTION
SALAS O'BRIEN NORTH CAROLINA, INC.
702 OBERLIN ROAD, SUITE 300,
RALEIGH, NC 27605
919.832.8118 T
SALASOBRIEN.COM
NC LIC#F-1434

WAKE COUNTY NORTH CAROLINA

SEALS

DocuSigned by:
Mr. Reginald D. Adams
61D76000BFA2424...

NORTH CAROLINA PROFESSIONAL SEAL 19658 ENGINEER REGINALD D. ADAMS

9/3/2026

PROJECT INFORMATION

PROJECT NO.:	2506
PHASE:	BID SET
DATE:	08/17/26
DRAWN BY:	RDA
CHECKED BY:	RDA

REVISIONS

NO.	DESCRIPTION	DATE
1	ADDEDNUM #2	9/4/2026

SHEET INFORMATION

E100

ELECTRICAL SITE PLAN NEW WORK

Docusign Envelope ID: 543F3D2E-B076-8893-827C-474D0AA48EEF

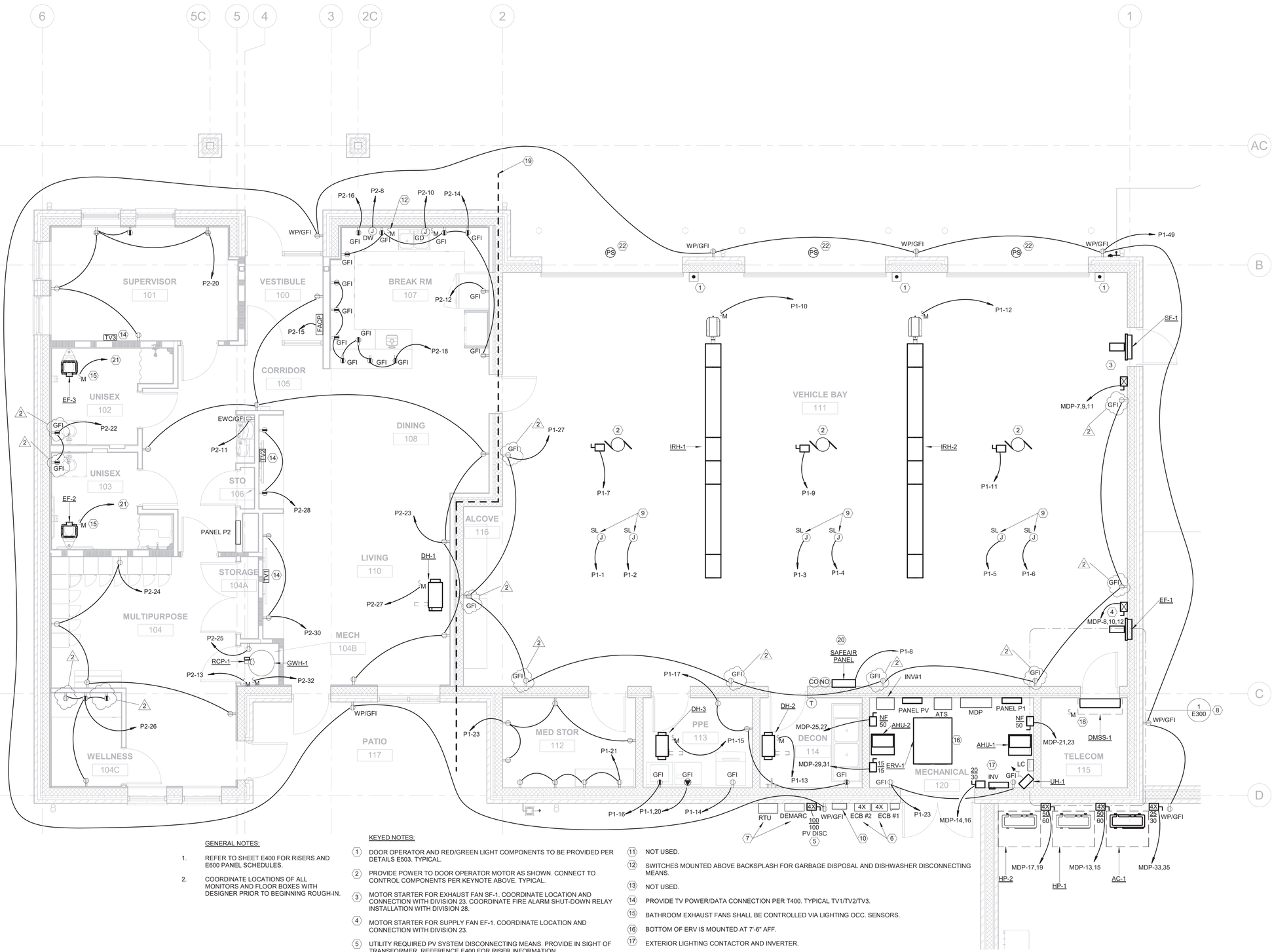

1 E201 ELECTRICAL POWER NEW WORK
1/4" = 1'-0"

GENERAL NOTES:

1. REFER TO SHEET E400 FOR RISERS AND E600 PANEL SCHEDULES.
2. COORDINATE LOCATIONS OF ALL MONITORS AND FLOOR BOXES WITH DESIGNER PRIOR TO BEGINNING ROUGH-IN.

KEYED NOTES:

1. DOOR OPERATOR AND RED/GREEN LIGHT COMPONENTS TO BE PROVIDED PER DETAILS E503. TYPICAL.
2. PROVIDE POWER TO DOOR OPERATOR MOTOR AS SHOWN. CONNECT TO CONTROL COMPONENTS PER KEYNOTE ABOVE. TYPICAL.
3. MOTOR STARTER FOR EXHAUST FAN SF-1. COORDINATE LOCATION AND CONNECTION WITH DIVISION 23. COORDINATE FIRE ALARM SHUT-DOWN RELAY INSTALLATION WITH DIVISION 28.
4. MOTOR STARTER FOR SUPPLY FAN EF-1. COORDINATE LOCATION AND CONNECTION WITH DIVISION 23.
5. UTILITY REQUIRED PV SYSTEM DISCONNECTING MEANS. PROVIDE IN SIGHT OF TRANSFORMER. REFERENCE E400 FOR RISER INFORMATION.
6. UTILITY AND GENERATOR ENCLOSED CIRCUIT BREAKERS; REFERENCE E400.
7. PROVIDE SCADA EQUIPMENT PER DETAILS SHEET E102 AND E103.
8. REFER TO 1/E300 FOR ENLARGED PLAN THIS AREA.
9. PROVIDE 20 AND 30 AMPERE SHORE-LINE DROPS PER DETAIL 2/E503. EXACT LOCATIONS WILL BE FIELD VERIFIED WITH OWNER AND DESIGNER IN FIELD PRIOR TO BEGINNING ROUGH-IN. TYPICAL.
10. 600 AMPERE DUKE APPROVED CT CABINET AND METER BASE.
11. NOT USED.
12. SWITCHES MOUNTED ABOVE BACKSPLASH FOR GARBAGE DISPOSAL AND DISHWASHER DISCONNECTING MEANS.
13. NOT USED.
14. PROVIDE TV POWER/DATA CONNECTION PER T400. TYPICAL TV1/TV2/TV3.
15. BATHROOM EXHAUST FANS SHALL BE CONTROLLED VIA LIGHTING OCC. SENSORS.
16. BOTTOM OF ERV IS MOUNTED AT 7'-6" AFF.
17. EXTERIOR LIGHTING CONTACTOR AND INVERTER.
18. PROVIDE WIRING FROM EXTERIOR CONDENSING UNIT TO DMMS-1. DIVISION 23 AND DIVISION 26 SHALL CLOSELY COORDINATE NECESSARY WIRING METHODS BETWEEN THESE UNITS AT BOTH THE SHOP DRAWING STAGE AND PRIOR TO BEGINNING ANY ROUGH-IN.
19. ALL CIRCUITING PLAN WEST OF THIS LINE IS TO PANEL P1 UON.
20. REFERENCE 3/E503 FOR ADDITIONAL WIRING REQUIREMENTS RELATED TO SAFE AIR PANEL.
21. EXHAUST FAN CONNECTED AND CONTROLLED BY LIGHTING CIRCUIT. REFER TO 1/E200 FOR CIRCUIT INFORMATION".
22. PROVIDE PRESENCE SENSOR CENTERED OVER DOOR AT 15'-4". BASIS-OF-DESIGN BEA INC. MODEL #IS40P. INTEGRATE RELAYING INTO DOOR CONTROLS, COORDINATING WITH DOOR VENDOR. TYPICAL.

WALL LEGEND

- GYPSUM BOARD CONSTRUCTION
- 1/2 HR FIRE BARRIER UL U419
- 2 HR FIRE BARRIER UL U905
- CMU CONSTRUCTION

Esse Architects
632 PERSHING ROAD
RALEIGH, NORTH CAROLINA 27608
www.esse-architects.com

WAKE COUNTY MINI CITY EMS STATION

4704 HARGROVE RD.
RALEIGH, NC
27616

WAKE COUNTY FACILITIES DESIGN & CONSTRUCTION

CONSULTANTS

CIVIL & LANDSCAPE ARCHITECTS
WITHERSRAVENEL
137 SOUTH WILMINGTON STREET, SUITE 200
RALEIGH, NC 27601
919.535.5200 T

STRUCTURAL
LYSAGHT & ASSOCIATES
120 ST. MARY'S STREET
RALEIGH, NC 27605
919.833.0495 T

MECHANICAL, ELECTRICAL, PLUMBING, & FIRE PROTECTION
SALAS O'BRIEN NORTH CAROLINA, INC.
702 OBERLIN ROAD, SUITE 300,
RALEIGH, NC 27605
919.832.8118 T
SALASOBRIEN.COM
NC LICIFF-1434

WAKE COUNTY NORTH CAROLINA

SEALS

NORTH CAROLINA PROFESSIONAL SEAL 19156 ENGINEER REGINALD D. ADAMS

09/03/2026

PROJECT INFORMATION

PROJECT NO.:	2506
PHASE:	BID SET
DATE:	08/17/26
DRAWN BY:	TAV
CHECKED BY:	RDA

REVISIONS

NO.	DESCRIPTION	DATE
2	ADDENDUM 2	9-4-2026

SHEET INFORMATION

E201

ELECTRICAL POWER NEW WORK

Docusign Envelope ID: 543F3D2E-B076-8893-827C-474D0AA48EEF

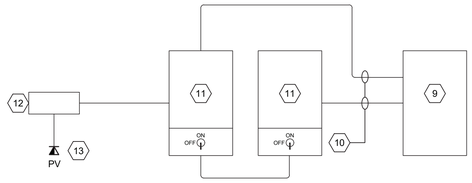

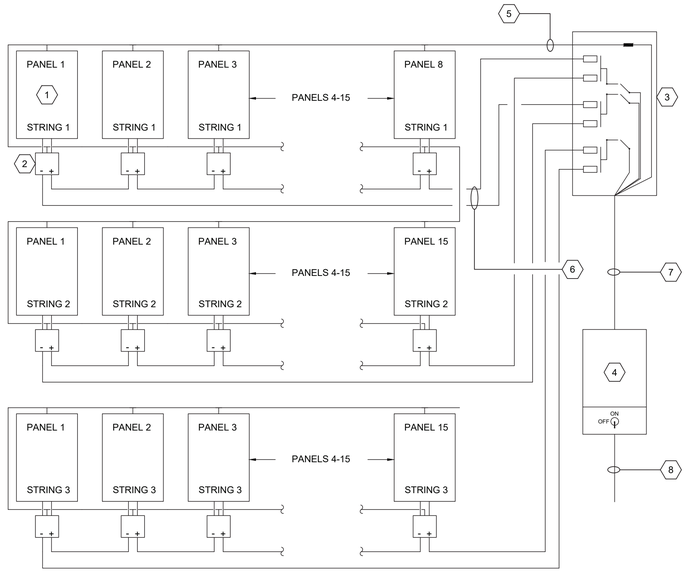

NOTES KEYED TO SCHEMATIC:

1. 580 (MAX) WATT STC HIGH EFFICIENCY SOLAR PANEL. TYPICAL.
2. POWER OPTIMIZER.
3. DC COMBINER (IF REQUIRED).
4. 30.2 kW/17.3 kVA INVERTER.
5. #10 BARE COPPER GND CONDUCTOR (ON ROOF); IN CONDUIT INSIDE BUILDING.
6. 2#10 AWG DC CONDUCTORS IN 1" CONDUIT TO COMBINER.
7. 3#8 AWG CONDUCTORS IN 1" CONDUIT TO INVERTER.
8. CONDUCTOR FROM INVERTER TO PANEL "PV1" AS NOTED ON PANEL "PV1" SCHEDULE.
9. PROVIDE MANUFACTURER FURNISHED CTs AT EACH PV FEEDER IN MDP PANEL.
10. PROVIDE WIRING IN CONDUIT FROM CTs PER MANUFACTURER'S RECOMMENDATIONS.
11. CONNECT MONITOR WIRING AT BUILT-IN RGM IN EACH INVERTER.
12. CONTROL AND COMMUNICATION GATEWAY. WHERE MULTIPLE INVERTERS ARE PROVIDED, DAISY-CHAIN AND CONNECT TO GATEWAY.
13. CONNECT TO OWNER'S NETWORK.

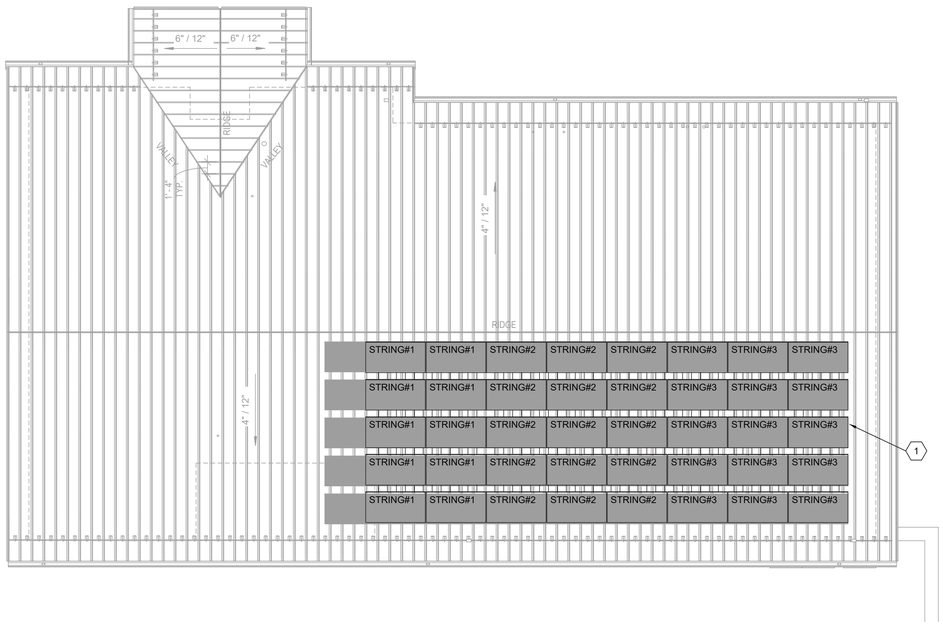

1 E202 ELECTRICAL ROOF PLAN
1/8"=1'-0"

GENERAL NOTES:

1. REFER TO DETAIL ABOVE FOR PV WIRING SCHEMATIC.
2. PV SYSTEM SHALL BE PROVIDED AS ADD ALTERNATE #1. ADD ALTERNATE PRICING SHALL INCLUDE ROOF MOUNTED PANELS, INVERTERS, COMBINER BOXES, EXTERIOR DISCONNECTS, PANEL PV1 AND ALL OTHER MINOR EQUIPMENT RELATED TO THE PV SYSTEM. PROVIDE PRICING ON BID FORM AS INDICATED.
3. AS PART OF BASE BID, PROVIDE ALL CONDUIT FOR THE ADDITION OF A FUTURE PV SYSTEM AT A LATER DATE. THIS SHALL INCLUDE 4-1"C.TO THE ROOF TO THE MAIN ELECTRICAL ROOM AS WELL AS ANY UNDERGROUND CONDUITS FROM THE PV DISCONNECT ON THE EXTERIOR OF THE BUILDING TO THE PROPOSED LOCATION OF PANELS PV1 AND MDP.
4. LOCATION OF PANELS SHALL BE COORDINATED WITH BOTH DIVISION 22 AND DIVISION 23 SUBCONTRACTOR PRIOR TO SUBMISSION OF SHOP DRAWINGS.

NOTES KEYED TO 1/E202:

1. NOMINAL 580 WATT PV PANEL. TYPICAL.

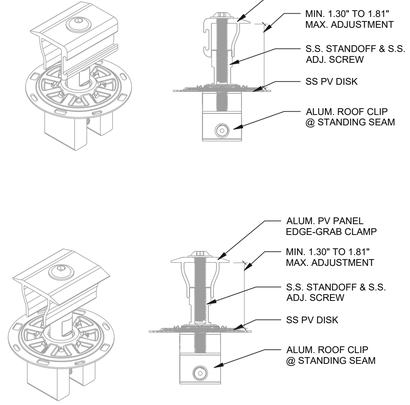

2 E202 PV PANEL FASTENER DETAILS
NO SCALE

THE PV INSTALLER SHALL PROCURE A SEPARATE PERMIT FOR ALL WORK RELATED TO THE PV SYSTEM INSTALLATION. 1

Esse Architects
632 PERSHING ROAD
RALEIGH, NORTH CAROLINA 27608
P 919.742.5669
www.esse-architects.com

WAKE COUNTY MINI CITY EMS STATION

4704 HARGROVE RD.
RALEIGH, NC
27616

WAKE COUNTY FACILITIES DESIGN & CONSTRUCTION

CONSULTANTS

CIVIL & LANDSCAPE ARCHITECTS
WITHERSRAVENEL
137 SOUTH WILMINGTON STREET, SUITE 200
RALEIGH, NC 27601
919.535.5200 T

STRUCTURAL
LYSAGHT & ASSOCIATES
120 ST. MARY'S STREET
RALEIGH, NC 27605
919.833.0495 T

MECHANICAL, ELECTRICAL, PLUMBING, & FIRE PROTECTION
SALAS O'BRIEN NORTH CAROLINA, INC.
702 OBERLIN ROAD, SUITE 300,
RALEIGH, NC 27605
919.832.8118 T
SALASOBRIEN.COM
NC LIC#F-1434

WAKE COUNTY NORTH CAROLINA

SEALS

DocuSigned by:
Mr. Reginald D. Adams
61D76000BF A2434

NORTH CAROLINA PROFESSIONAL SEAL 19658 ENGINEER REGINALD D. ADAMS

9/3/2026

PROJECT INFORMATION

PROJECT NO.:	2506
PHASE:	BID SET
DATE:	08/17/26
DRAWN BY:	RDA
CHECKED BY:	RDA

REVISIONS

NO.	DESCRIPTION	DATE
1	ADDENDUM #2	9/4/2026

SHEET INFORMATION

E202

ELECTRICAL ROOF PLAN

Docusign Envelope ID: 543F3D2E-B076-8893-827C-474D0AA48EEF

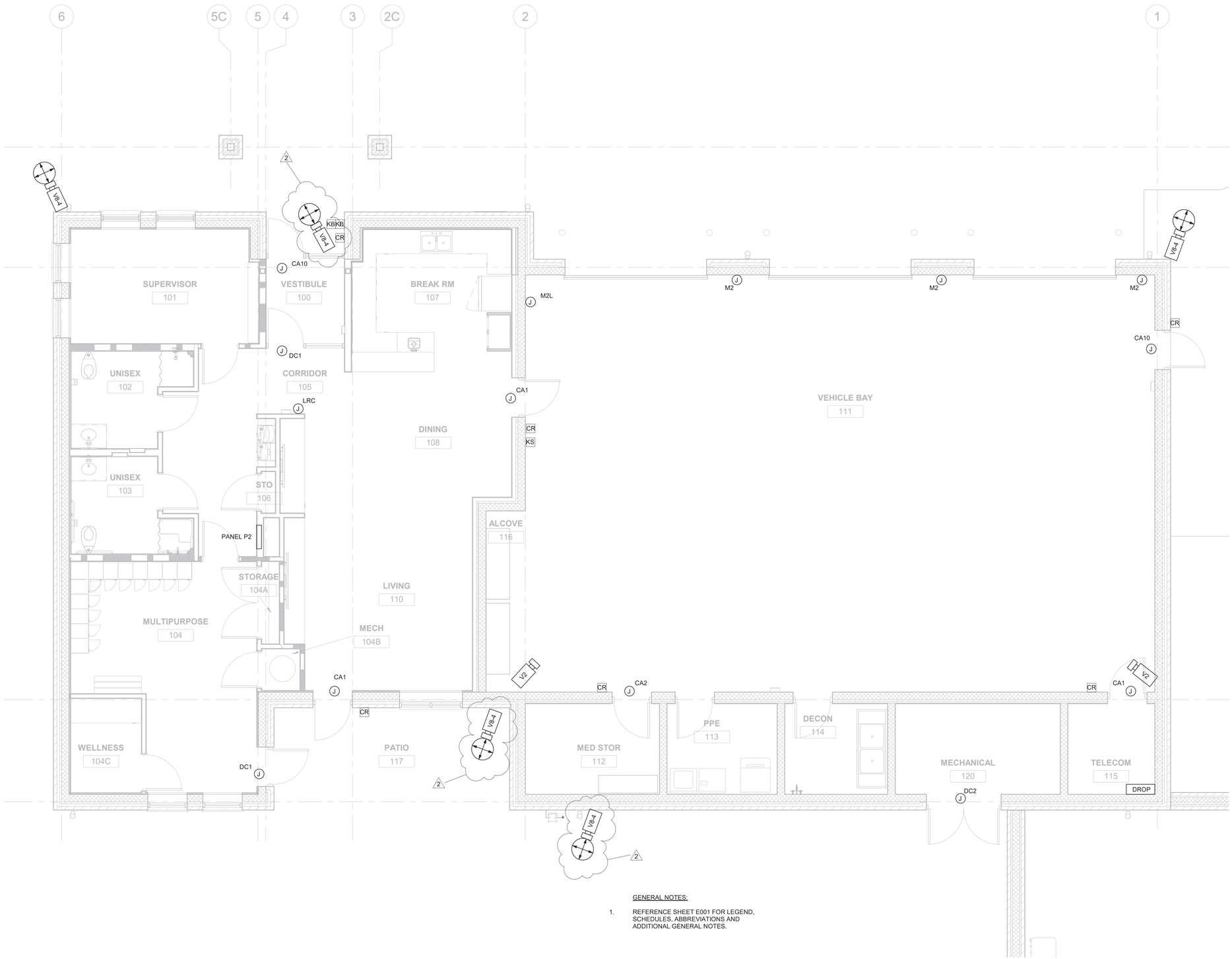

SECURITY SYSTEM SYMBOLS

REFER TO DETAILS SHEETS SS400 &SS401 FOR ROUGH-IN DETAILS RELATED TO SEC. SYSTEMS INSTALLATION.

DROP x	REFER TO SS401 FOR ROUGH-IN INFORMATION
CR	CARD READER.
J CAX	CARD READER DOOR ROUGH IN. PROVIDE POWER CONNECTION AS NOTED ON POWER DRAWINGS.
J ELX	ELECTRIC LOCK ROUGH IN AND POWER.
J DCX	DOOR CONTACT.
J GB	GLASS BREAK.
KS	KEYED SWITCH
KB	SECURITY CONNECTION AT KNOX BOX.
ST	STENPHONE
LRC J	LATCH RELEASE CONTROL.
J MX	MOTION DETECTOR.
J DX	DURESS BUTTON.
V1-2 / V1-2 / V1 / V2-4	SECURITY CAMERAS.

GENERAL NOTES:

1. REFERENCE SHEET E001 FOR LEGEND, SCHEDULES, ABBREVIATIONS AND ADDITIONAL GENERAL NOTES.

1 SC200 SECURITY NEW WORK
1/4" = 1'-0"

WALL LEGEND

- GYPSUM BOARD CONSTRUCTION
- 1/2 HR FIRE BARRIER UL U419
- 2 HR FIRE BARRIER UL U905
- CMU CONSTRUCTION

Esse Architects
632 PERSHING ROAD
RALEIGH, NORTH CAROLINA 27608
www.esse-architects.com

WAKE COUNTY MINI CITY EMS STATION

4704 HARGROVE RD.
RALEIGH, NC
27616

WAKE COUNTY FACILITIES DESIGN & CONSTRUCTION

CONSULTANTS

CIVIL & LANDSCAPE ARCHITECTS
WITHERSRAVENEL
137 SOUTH WILMINGTON STREET, SUITE 200
RALEIGH, NC 27601
919.535.5200 T

STRUCTURAL
LYSAGHT & ASSOCIATES
120 ST. MARY'S STREET
RALEIGH, NC 27605
919.833.0495 T

MECHANICAL, ELECTRICAL, PLUMBING, & FIRE PROTECTION
SALAS O'BRIEN NORTH CAROLINA, INC.
702 OBERLIN ROAD, SUITE 300,
RALEIGH, NC 27605
919.832.8118 T
SALASOBRIEN.COM
NC LIC#F-1434

WAKE COUNTY NORTH CAROLINA

SEALS



09/03/2026

PROJECT INFORMATION

PROJECT NO.:	2506
PHASE:	BID SET
DATE:	08/17/26
DRAWN BY:	Author
CHECKED BY:	Checker

REVISIONS

NO.	DESCRIPTION	DATE
2	ADDENDUM 2	9-4-2026

SHEET INFORMATION

SC200

SECURITY NEW WORK

Docusign Envelope ID: 543F3D2E-B076-8893-827C-474D0AA48EEF

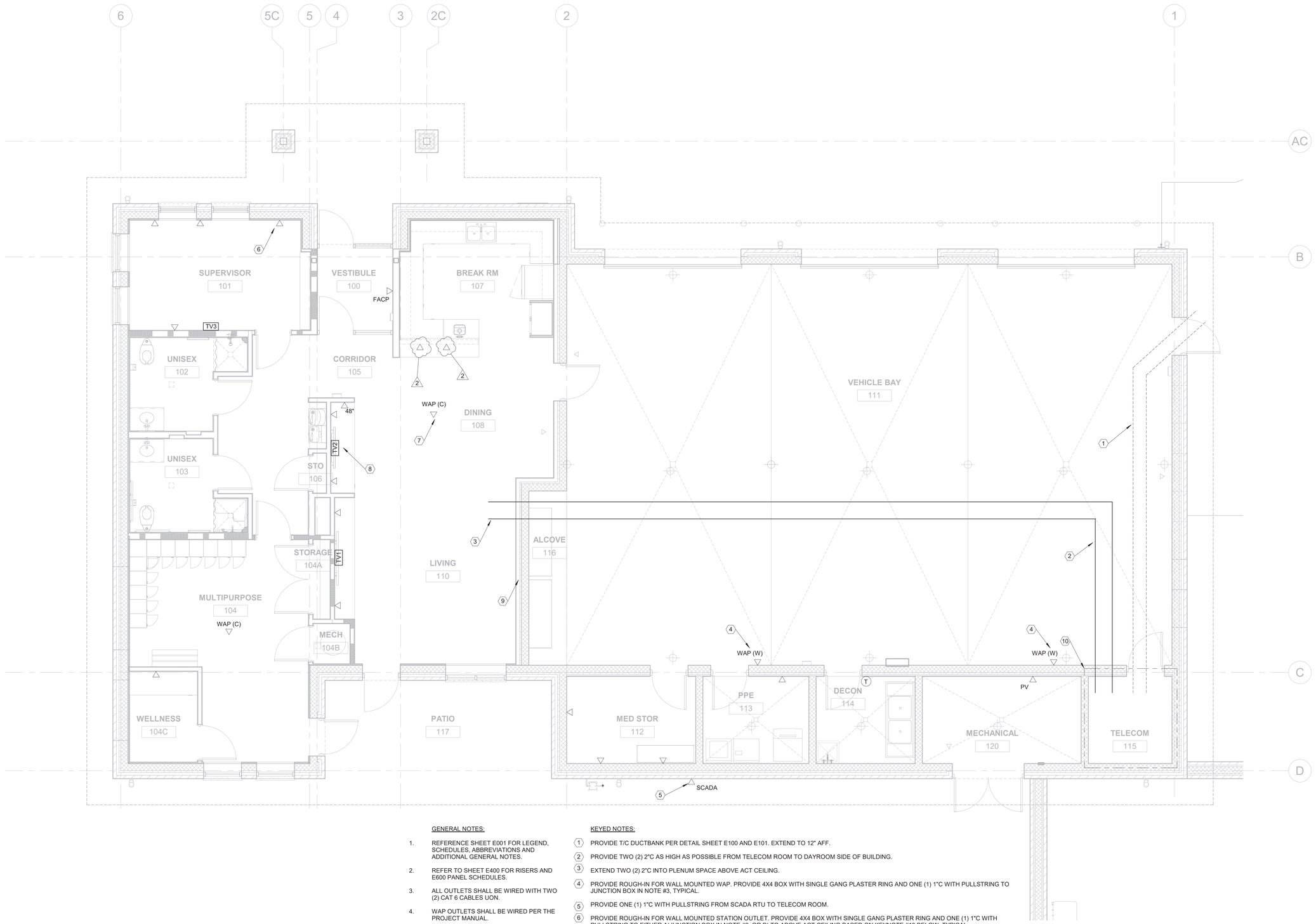

1 T200 TELECOM NEW WORK
1/4" = 1'-0"

GENERAL NOTES:

1. REFERENCE SHEET E001 FOR LEGEND, SCHEDULES, ABBREVIATIONS AND ADDITIONAL GENERAL NOTES.
2. REFER TO SHEET E400 FOR RISERS AND E600 PANEL SCHEDULES.
3. ALL OUTLETS SHALL BE WIRED WITH TWO (2) CAT 6 CABLES UON.
4. WAP OUTLETS SHALL BE WIRED PER THE PROJECT MANUAL.
5. TV2 IN LIVING 110 SHALL BE PROVIDED WITH TWO (2) CAT 6 CABLES AND ONE (1) RG-6U COAXIAL CABLE.
6. TV3 IN WORK 109 SHALL BE PROVIDED WITH TWO (2) CAT6 CABLES.
7. TV3 IN SUPERVISOR 101 SHALL BE PROVIDED WITH TWO (2) CAT6 CABLES ONE (1) RG-6U COAXIAL CABLE..

KEYED NOTES:

1. PROVIDE T/C DUCTBANK PER DETAIL SHEET E100 AND E101. EXTEND TO 12" AFF.
2. PROVIDE TWO (2) 2"C AS HIGH AS POSSIBLE FROM TELECOM ROOM TO DAYROOM SIDE OF BUILDING.
3. EXTEND TWO (2) 2"C INTO PLENUM SPACE ABOVE ACT CEILING.
4. PROVIDE ROUGH-IN FOR WALL MOUNTED WAP. PROVIDE 4X4 BOX WITH SINGLE GANG PLASTER RING AND ONE (1) 1"C WITH PULLSTRING TO JUNCTION BOX IN NOTE #3, TYPICAL.
5. PROVIDE ONE (1) 1"C WITH PULLSTRING FROM SCADA RTU TO TELECOM ROOM.
6. PROVIDE ROUGH-IN FOR WALL MOUNTED STATION OUTLET. PROVIDE 4X4 BOX WITH SINGLE GANG PLASTER RING AND ONE (1) 1"C WITH PULLSTRING TO EITHER AJUNCTION BOX IN NOTE #3, OR B) TO ABOVE ACT CEILING BASED ON KEYNOTE #10 BELOW. TYPICAL.
7. PROVIDE ROUGH-IN FOR CEILING MOUNTED WAP. PROVIDE 4X4 BOX WITH SINGLE GANG PLASTER RING AND ONE (1) 1"C WITH PULLSTRING TO 12" FROM BOX. TYPICAL ALL CEILING MOUNTED WAPS.
8. PROVIDE TV POWER/DATA CONNECTION PER T400. TYPICAL TV1/TV2/TV3.
9. ALL OUTLETS PLAN EAST OF THIS WALL SHALL HAVE CONDUIT STUBBED 12" AFC; ALL OUTLETS PLAN WEST OF THIS WALL SHALL HAVE CONDUIT PROVIDED TO EITHER A) DIRECTLY TO THE MAIN TELECOM ROOM OR B) TO JUNCTION BOX NOTED IN KEYNOTE #3.
10. REFER TO SHEET E300 FOR ADDITIONAL INFORMATION THIS AREA.

WALL LEGEND

- GYPSUM BOARD CONSTRUCTION
- 1/2 HR FIRE BARRIER UL U419
- 2 HR FIRE BARRIER UL U905
- CMU CONSTRUCTION

Esse Architects
632 PERSHING ROAD
RALEIGH, NORTH CAROLINA 27608
www.esse-architects.com

WAKE COUNTY MINI CITY EMS STATION

4704 HARGROVE RD.
RALEIGH, NC
27616

WAKE COUNTY FACILITIES DESIGN & CONSTRUCTION

CONSULTANTS

CIVIL & LANDSCAPE ARCHITECTS
WITHERSRAVENEL
137 SOUTH WILMINGTON STREET, SUITE 200
RALEIGH, NC 27601
919.535.5200 T

STRUCTURAL
LYSAGHT & ASSOCIATES
120 ST. MARY'S STREET
RALEIGH, NC 27605
919.833.0495 T

MECHANICAL, ELECTRICAL, PLUMBING, & FIRE PROTECTION
SALAS O'BRIEN NORTH CAROLINA, INC.
702 OBERLIN ROAD, SUITE 300,
RALEIGH, NC 27605
919.832.8118 T
SALASOBRIEN.COM
NC LIC#F-1434

WAKE COUNTY NORTH CAROLINA

SEALS

NORTH CAROLINA PROFESSIONAL SEAL 049388 ENGINEER REGINALD D. ADAMS

09/03/2026

PROJECT INFORMATION

PROJECT NO.:	2506
PHASE:	BID SET
DATE:	08/17/26
DRAWN BY:	Author
CHECKED BY:	Checker

REVISIONS

NO.	DESCRIPTION	DATE
2	ADDENDUM 2	9-4-2026

SHEET INFORMATION

T200
TELECOM NEW WORK